Overview and Energy Power Analysis of Composite Solar Unmanned Aerial Vehicles

Zhengan Wu [1,*]

[1] Beihang University, BUAA, Beijing,China

* 1430889956@qq.com

Abstract. In this paper, based on the existing research progress and challenges in unmanned aerial vehicles (UAVs), efforts are made to enhance the performance of UAVs in terms of endurance and range by optimizing the energy and power systems. We propose the concept of a composite UAV and further introduce the concept of a solar-powered UAV. The paper outlines the project's design philosophy and innovative aspects, followed by an exploration of potential applications. Energy control calculations are then conducted, leading to the proposal of a gravity energy storage strategy. Then a preliminary flight control scheme is presented. This paper concludes with a conclusion and prospects for future work.

Keywords: component; solar-powered, power systems, composite UAV.

1. Introduction

Over the course of several decades, the application scope of unmanned aerial vehicles (UAVs) has continually expanded. The demand for improved endurance performance has grown, surpassing the capabilities of traditional batteries or fuel cells for extended flights. After various attempts, leveraging solar power to achieve prolonged UAV flight is increasingly considered the optimal solution. Amidst the ongoing progress in solar photovoltaic material technology and the continual reduction in production costs, the conditions for achieving long-duration flights with solar-powered aircraft are becoming more mature. This technology holds the potential to execute extended missions at high altitudes without the need for fuel consumption, demonstrating significant promise in both military and civilian domains[1]。

At present, solar-powered unmanned aerial vehicles (UAVs) that have undergone test flights primarily adopt a design with a large aspect ratio for a single-wing configuration. For instance, in 2015, the solar-powered aircraft, 'AtlantikSolar,' created by the Swiss Federal Institute of Technology, successfully completed an uninterrupted 81-hour flight.[2].Other examples include the Solong UAV developed by the US company CD Propulsion for telemetry and remote sensing, the Helios UAV designed by NASA, and the Rainbow solar-powered UAV designed domestically. The Helios UAV, employing a large-scale flying-wing layout, incurs significant structural weight costs to control deformations under payload. If such aircraft adopt designs allowing for substantial shape variations, it introduces unpredictability in risk, rendering the assumption of rigid flight structures no longer applicable. Moreover, there exists a coupling between structural deformations and changes in aerodynamic performance[3].A single-wing, monoplane solar aircraft is constrained by the efficiency of solar panels. To meet payload requirements, a sufficiently large wing area is needed to accommodate solar panels, ensuring an ample energy supply. However, scaling up poses a series of challenges. Limited by the relatively low available power, solar aircraft must pursue an extremely light weight, a large aspect ratio for higher cruising efficiency, and structural design constraints to ensure sustained flight[4].The single wing of solar aircraft often adopts a beam-type layout, where the skin does not participate in the transfer of bending or torsional moments[5].The lower structural density of the wing leads to a series of stiffness and strength issues. The wingspan of solar UAVs, spanning tens of meters, restricts their use at some small airports. To address the practical scenario of low-density general aviation airports, developing solar UAVs with smaller wingspans for takeoff and landing can better utilize smaller airports and even other sites like highways, without occupying resources at large airports.

2. Project Design

The aim of this project is to create a solar-powered unmanned aerial vehicle through the design process. (UAV) capable of adapting to various takeoff and landing conditions while meeting diverse payload requirements. The aim is to address the inherent contradiction between the size and payload of solar UAVs, providing outstanding mission performance and enhanced environmental adaptability. The project adopts a modular, segmented solar aircraft concept.The designed unit employs a triangular joined-wing configuration, enhancing structural efficiency through three-dimensional layout and minimizing deformation of the individual aircraft unit. Additionally, the triangular layout facilitates the formation of a grid-like structure in the air, as illustrated in Figure 1, creating a larger three-dimensional structural network. This expansion in two directions helps avoid the stiffness issues associated with a single-direction expansion of long wings.The modular composite aircraft also possesses more flexible mission execution capabilities. The modules can be flexibly combined to create various functional assemblies, enhancing versatility in mission configurations.

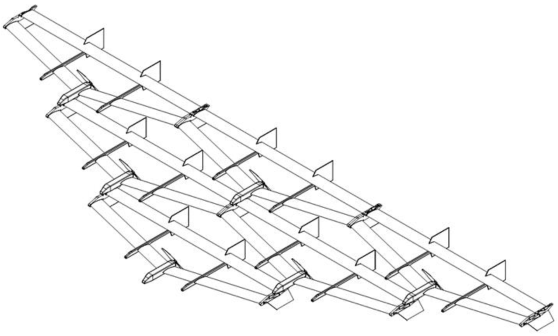

Figure 1. Concept diagram of the grid combination scheme

Harnessing the benefits of solar-powered unmanned aerial vehicles (UAVs) for extended loitering and cruising capabilities, these drones excel in executing routine patrols and long-duration communication tasks in remote or challenging-to-reach areas. UAVs with a smaller wingspan for takeoff exhibit enhanced adaptability, boosting their survival capabilities in wartime and offering advantages in terms of ease of transport and rapid deployment. This type of UAV is capable of modular long-distance transport maneuvers, utilizing small airports, highways, and similar locations for takeoff and landing operations.Once airborne, the combination of individual units forms a larger aerial platform, contributing to higher cruising efficiency. While ensuring the aircraft can linger in the air for extended periods, it can carry more payload. Certain units can also adapt flexibly in terms of performance; for instance, units requiring close observation can allocate more weight from the energy system to the mission payload. Units with abundant energy in the system or specialized energy units can provide continuous day-and-night power connections through wired means.

The composite solar aircraft, as depicted in Figure 2, also possesses the capability to execute tasks separately. It can function entirely as a cluster to perform missions or split a few units from a larger group to carry out nearby tasks. For example, during regional surveillance, if the composite unit detects suspicious activities, it can dispatch a single unit to conduct detailed observations in the area, significantly enhancing regional observation capabilities.

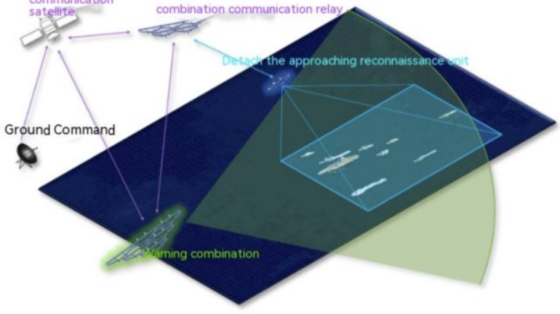

Figure 2. Combined vigilance patrol

3. Core technology of the Project

3.1 Calculation of energy control

The energy system of each unit primarily comprises solar photovoltaic cells and batteries for energy storage. The energy balance calculation model for the basic type of solar-powered UAV unit is illustrated in Figure 3. To streamline the calculation model, it is assumed that the aircraft maintains a consistent speed at elevated altitudes, leading to a uniform power consumption. To simplify the calculation model, it is assumed that the aircraft is flying at a constant speed at high altitudes, resulting in a constant power consumption. After inputting geographical coordinates, altitude, and time into the model, the solar irradiance calculation module computes the solar energy irradiance power. The functions within the solar irradiance calculation module take into account various factors such as location, altitude, date, atmospheric transparency, direct and scattered light sources, among others, ensuring a relatively accurate calculation. Assuming a solar cell conversion efficiency of 24%, the model generates a curve depicting the absorbed energy by the solar panels on the unmanned aerial vehicle (UAV). As the solar panels are located only on the upper surface, energy absorption begins to increase when the sun reaches the horizontal direction.

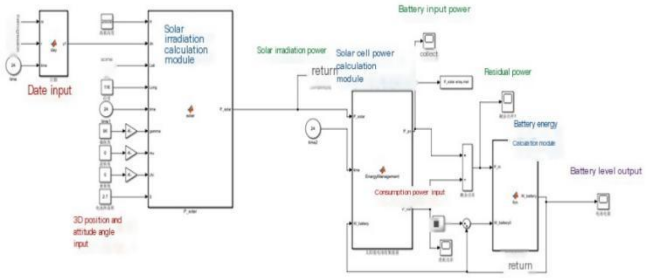

Figure 3. The energy system calculation model

The primary components of the individual unit's energy system include solar photovoltaic cells and storage batteries. The energy balance calculation model for the basic type of solar-powered UAV unit is illustrated in Figure 3. For the sake of simplifying the calculation model, it is assumed that the aircraft maintains a consistent speed at high altitudes, leading to a constant power consumption. After inputting geographical coordinates, altitude, and time into the model, the solar irradiance calculation module computes the solar energy irradiance power. The functions within the solar irradiance calculation module take into account various factors such as location, altitude, date, atmospheric transparency, direct and scattered light sources, among others, ensuring a relatively accurate calculation. Assuming a solar cell conversion efficiency of 24%, the model generates a curve depicting the absorbed energy by the solar panels on the unmanned aerial vehicle (UAV). As the solar panels are located only on the upper surface, energy absorption begins to increase when the sun reaches the horizontal direction.

After inputting the geographical location, height and time, the solar irradiation energy power can be calculated by the solar irradiation calculation module in the model. The functions in the solar irradiation calculation module take into account many factors, such as position, height, date, atmospheric transparency, direct radiation and scattered light source, and are more accurate. The change curve is shown in Figure 4(a) (the summer solstice change curve on June 21).

The conversion efficiency of the solar cell is 24%, and the solar cell of the UAV calculation model absorbs energy in Figure 4 (b). With only solar panels on the upper surface, the energy begins to increase after the sun reaches the horizontal direction. Despite the same trends in Figure 4(a) and Figure 4 (b), the energy values in Figure 4(b) are greatly reduced.

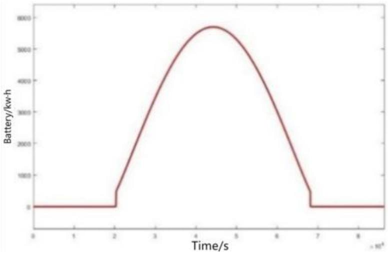

(A) Solar irradiation power

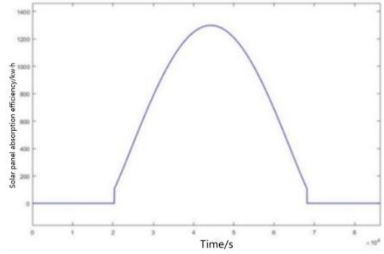

(b) Power absorption by solar cells

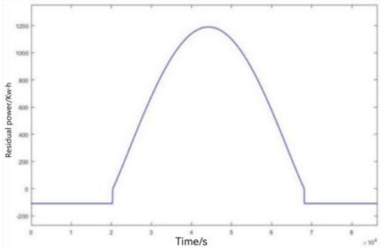

(C) Change curve of residual power

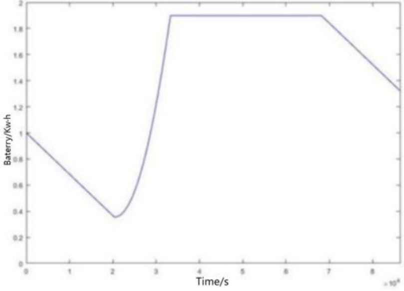

(d) Change curve of residual power of lithium battery

Figure 4. Change of each energy parameter

For a solar-powered aircraft in level flight, the energy control process is as follows:

1.If the solar irradiance power is less than the cruise power consumption, the solar panels, operating in Maximum Power Point Tracking (MPPT) mode, collect the irradiance energy. This energy, along with the lithium battery, is used for propulsion power.

2.If the irradiance power is greater than the cruise power consumption and the lithium battery is not fully charged, the excess energy collected in MPPT mode is used for both propulsion and charging the lithium battery.

3.If the irradiance power is greater than the cruise power consumption and the lithium battery is fully charged, the irradiance energy is output according to the actual demand, and MPPT mode is not necessary.

4.During nighttime when there is no irradiance energy, the aircraft is powered solely by the lithium battery.

As a result, the model generates a curve depicting the variation in remaining power. When the remaining power is negative, it indicates that the irradiance energy is less than the consumption, requiring the lithium battery to discharge for power supply. Conversely, a positive value indicates energy available for charging the lithium battery.

By selecting the lithium battery capacity, the model calculates the trend of the lithium battery energy level. If the final value of this curve is higher than the initial value and the energy curve remains above zero throughout, it implies that after completing a day-night energy cycle, the energy in the battery will not be lower than the initial value. Therefore, the UAV can achieve uninterrupted continuous flight. Taking the example of the summer solstice, the analysis suggests that this aircraft can maintain continuous flight in the Beijing area.

Due to variations in solar irradiance at different times, the absorption power of the solar panel array fluctuates, leading to different remaining battery levels. Generally, longer daylight hours are more favorable for the aircraft to complete an energy cycle. Therefore, if the energy cycle can be completed on the winter solstice, the aircraft may have the capability for continuous flight throughout the year.

Figure 5(a) illustrates the fluctuation in lithium battery levels for an unmanned aerial vehicle (UAV) in Beijing on December 21st, specifically during the winter solstice. From the curve, it is evident that under these conditions, the battery level is maintained in the positive range, and the remaining battery level after 24 hours is higher than the initial value, indicating the completion of an energy cycle. The annual lithium battery remaining level curve for the aircraft is illustrated in Figure 5(b).

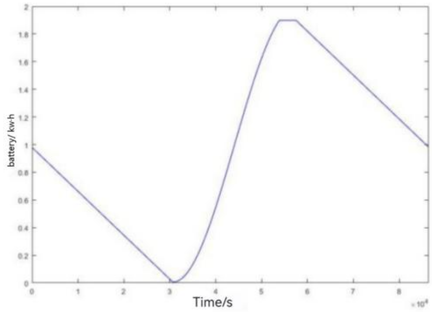

(A) December 21st

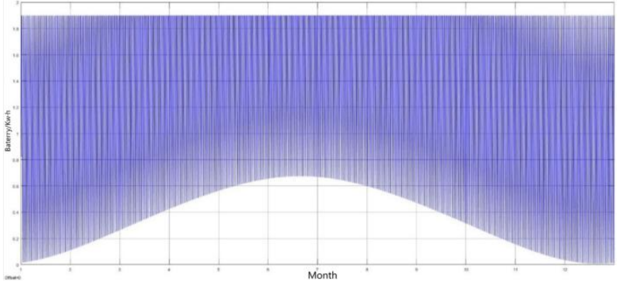

(b) annual

Figure 5. Consider the battery residual power change curve of the flat fly

The curve depicted in Figure 5(a) indicates that the energy cycle can be completed on the winter solstice. However, considering the potential performance degradation of solar panels and lithium batteries due to prolonged flight, achieving this cycle may pose challenges. If combined with flight planning methods such as gravity energy storage, the aircraft's payload capacity would be strengthened, and its performance boundaries extended.

3.2 Gravity energy storage strategy

For a solar-powered aircraft, gravity energy storage flight can be employed, and the specific implementation process depends on the mission requirements. To illustrate, assuming a nighttime low-power cruising altitude of 15 km and a daytime cruising altitude of 17 km, the gravity energy storage process is outlined in Figure 6, with the following stages:

(1) If the morning solar irradiance is less than the cruising power at an altitude below 15 km, both solar energy and the lithium battery are used for propulsion supply.

(2) If the solar irradiance is greater than the cruising power at an altitude above 15 km and the aircraft's altitude is below 17 km, all solar energy is used for climbing, and the battery does not charge.

(3) When the aircraft reaches an altitude of 17 km, and the lithium battery is not fully charged, the propulsion power is set to the cruising power for 17 km, and the remaining energy is used to charge the lithium battery.

(4) When the aircraft reaches an altitude of 17 km, and the lithium battery is fully charged, all solar irradiance power is used for aircraft climbing.

(5) During the afternoon period, if the solar irradiance is less than the level required for level cruising at the current altitude, and the flight altitude is above 15 km, and the lithium battery is fully charged, all solar irradiance power is used for powered gliding.

(6) If the solar irradiance is zero, and the altitude is above 15 km, the aircraft enters unpowered gliding, with propulsion power set to zero, until it reaches a minimum altitude of 15 km.

(7) When the aircraft's altitude reaches 15 km, it enters nighttime cruising mode, and only the lithium battery supplies power.

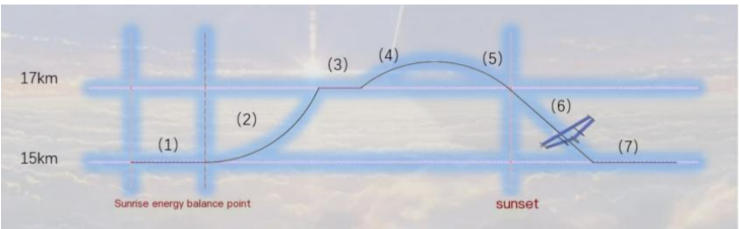

Figure 6. A highly-energy storage flight strategy

Using trajectory planning with gravitational energy storage, in situations where solar energy supply is insufficient and lithium battery capacity is not applicable, extends the flight time of the aircraft. For solar-powered aircraft, the gravitational energy storage flight mode can replace a portion of the battery weight, allowing for more weight distribution to the payload after iterations or achieving a lighter overall weight. This reduction in cruise power broadens the adaptability range for continuous solar-powered flight.

Connected-body aircraft exhibit higher cruise efficiency. If used as a fleet for cruising, the feasibility of continuous flight throughout the year can be further improved.

4. Flight Control

Figure 7 illustrates a simple dual-aircraft connection control scheme. In the scenario where two unmanned aerial vehicles (UAVs) establish signal contact, the master-slave designation designates the right side as the master and the left side as the slave. The slave is equipped with an Arduino Mega2560 development board, linked to a receiver, servos, and motors to synchronize its actions with the master.A common ground line is shared between the master and slave. The master outputs a high-level signal and an S-Bus signal from the wingtip connector to the slave. In asynchronous mode, the development board on the slave employs the pulseIn function to read control signals from its receiver and subsequently generates corresponding control signals for the servos and motors. When the development board detects a high-level signal from the wingtip connector, it reads the control signals from the master's receiver via the S-Bus signal.

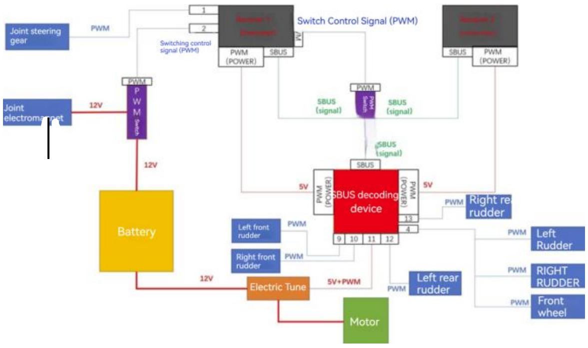

Figure 7. Combined control scheme

When changing the control mode, the master controller adjusts the value of one channel through a switch while configuring both wings of the master to act as right wings. When the slave detects a change in this channel value, it enters synchronization mode. In this state, the development board on the slave ceases to read signals from its receiver and, instead, transmits control signals mirroring those from the master's receiver to the directional and elevon servos. The slave also sends signals to the wings consistent with the left wing of the master. The synchronization persists until the channel value returns to its initial state or the high-level signal disappears. Two generations of controllers for the dual-aircraft connection scheme have been successfully developed and verified in principle. When connected, the slave's control devices are under master control, while in separation mode, the slave is controlled by its own flight controller.

As more UAVs are connected, both the master and slave carry connection control circuits to transmit UAV position information within the formation. The composite aircraft is divided with the entire right half as the master and the entire left half as the slave. Each half is further divided into right half master and left half slave, and so on, until the rightmost aircraft. Alternatively, a specific unit can be designated as the master to broadcast control signals. If the number of connected UAVs is odd, the middle UAV does not participate in aileron actions. During this process, sensor signals from each aircraft can be transmitted to the master for more precise navigation.

Currently, control signal transmission is primarily implemented via wired means. In future applications, wireless signal transmission can be added, complementing each other's strengths and serving as backups to enhance flight reliability.Abbreviations and Acronyms.

5. Conclusion and Outlook

This design aims to enhance the adaptability and endurance of high-altitude, long-endurance solar-powered unmanned aerial vehicles through a modular design, expanding their operational capabilities. The project is dedicated to creating a modular, convenient series of long-endurance aerial platforms that can be rapidly expanded and customized to meet a wide range of mission requirements, catering to both civilian needs and scientific or disaster relief purposes.

The triangular wing configuration provides a structural and geometric basis for the two-dimensional expansion of the aircraft. The small deformation characteristic of the unit-wing structure is suitable for larger-scale expansions. In contrast to single-wing large unmanned aircraft, this proposed solution effectively avoids the issues associated with excessive deformation.

Regarding energy and power, numerical calculations indicate that the combined solar-powered aircraft possesses the foundational regulation for completing an energy cycle, suggesting the potential for year-round continuous flight. By integrating methods such as gravitational energy storage into flight planning, the aircraft's payload capacity can be enhanced, pushing the performance boundaries further. Using gravitational energy storage in solar-powered aircraft flight can replace part of the battery weight, allowing for a more extensive weight distribution to the payload or reducing the overall weight of the aircraft. This, in turn, lowers cruise power, expanding the adaptability range for continuous solar-powered flight.

The connected aircraft demonstrates higher efficiency in cruising. If used as a composite aircraft for cruising, its feasibility for continuous flight throughout the year could be further improved. However, considering the performance degradation of solar cells and lithium batteries over prolonged flight durations, achieving this cycle might pose challenges. Further progress in the project awaits subsequent research.

References

[1] Oettershagen, Melzer P , Mantel A , et al. A Solar-powered Hand-launchable UAV for Low-altitude Multi-day Continuous Flight[J]. Proceedings IEEE International Conference on Robotics & Automation, 2015, 2015:3986-3993.

[2] L. Wirth, P. Oettershagen, J. Ambühl and R. Siegwart, "Meteorological path planning using dynamic programming for a solar-powered UAV," 2015 IEEE Aerospace Conference, Big Sky, MT, USA, 2015, pp. 1-11, doi: 10.1109/AERO.2015.7119284.

[3] Ma Dongli, Zhang Liang, Yang Muqing, et al. Overview of key technologies of ultra-long-endurance solar uav [J]. Aviation Journal, 2020,41 (3).

[4] Wang Wei, Geng Jianzhong, Duan Zhuoyi, et al. Analysis of the development status and design characteristics of solar energy aircraft [C] / / The 7th Youth Science and Technology Forum of China Aviation Society.

[5] Yin Chengyue, Gao Puyun, Guo Jian, et al. "Breeze" (Zephyr7) Analysis of UAV wing mechanical properties [J]. Strength and Environment, 2012,39 (3): 19-25.

[6] Zhang Liguo, Zhang Jian. Analysis of key technologies and development of solar energy aircraft [J]. Mechanical Engineer, 2018 (04): 1-4

[7] Noll T E, Brown J M, Perez-Davis M E, et al. [] Investigation of the Helios Prototype Aircraft Mishap Volume I Mishap Report.

[8] Wu Wenyan, Liu Qiang, Wu Liangjun. Mechanical properties of carbon fiber-reinforced composite components with different processes [J]. FRP / Composite Material, 2017 (10): 23-28.

[9] Wang Yaoxian. Composite material structure design [M]. Beijing: Chemical Industry Press, 2001:15,34-35,54-57.Computational Intelligence in Scheduling (SCIS 07), IEEE Press, Dec. 2007, pp. 57-64, doi:10.1109/SCIS.2007.357670.